



CADRO Heater CD-H02 Product Manual

2025.10

Hangzhou CADRO Computing Technology Co., Ltd

Contents

1 Overview 1
1.1 Product Introduction 1
1.2 Product Composition 1
1.3 Working environment 3
2 Main technical parameters 3
3 The principle of the system 3
4 List of main parts 5
5 Unit picture caption 5
6 Liquid cooling device installation 6
7 System use and operation 6
7.1 Precautions for use 6
7.2 Check before use 7
7.3 Turn on the container cooling system 7
7.4 Turn on and off Steps 7
8 Common faults and troubleshooting methods 9
9 Care and service 12
9.1 Overview 12
9.2 Preventive Maintenance 12
9.3 Regular Maintenance 12
10 Safety instructions 14

1 Overview

1.1 Product Introduction

CADRO Heater CD-H02， with an overall size of 339mm (length) ×188mm (width) ×200mm (height) (excluding external joint, lifting lug, handle size, etc.)， Place the device on the container rack and activate the cooling system to heat the coolant. When the inlet temperature switch detects the system medium temperature exceeds 30°C, the PTC heater will automatically disconnect and stop heating. If the inlet temperature switch malfunctions, it will not disconnect.When the temperature of the system medium reaches 50°C, the temperature switch on the outlet side of the PTC heater is controlled to disconnect the power supply. The two switches are in series mode to ensure safety.

1.2 Product Composition

1)CADRO Heater CD-H02

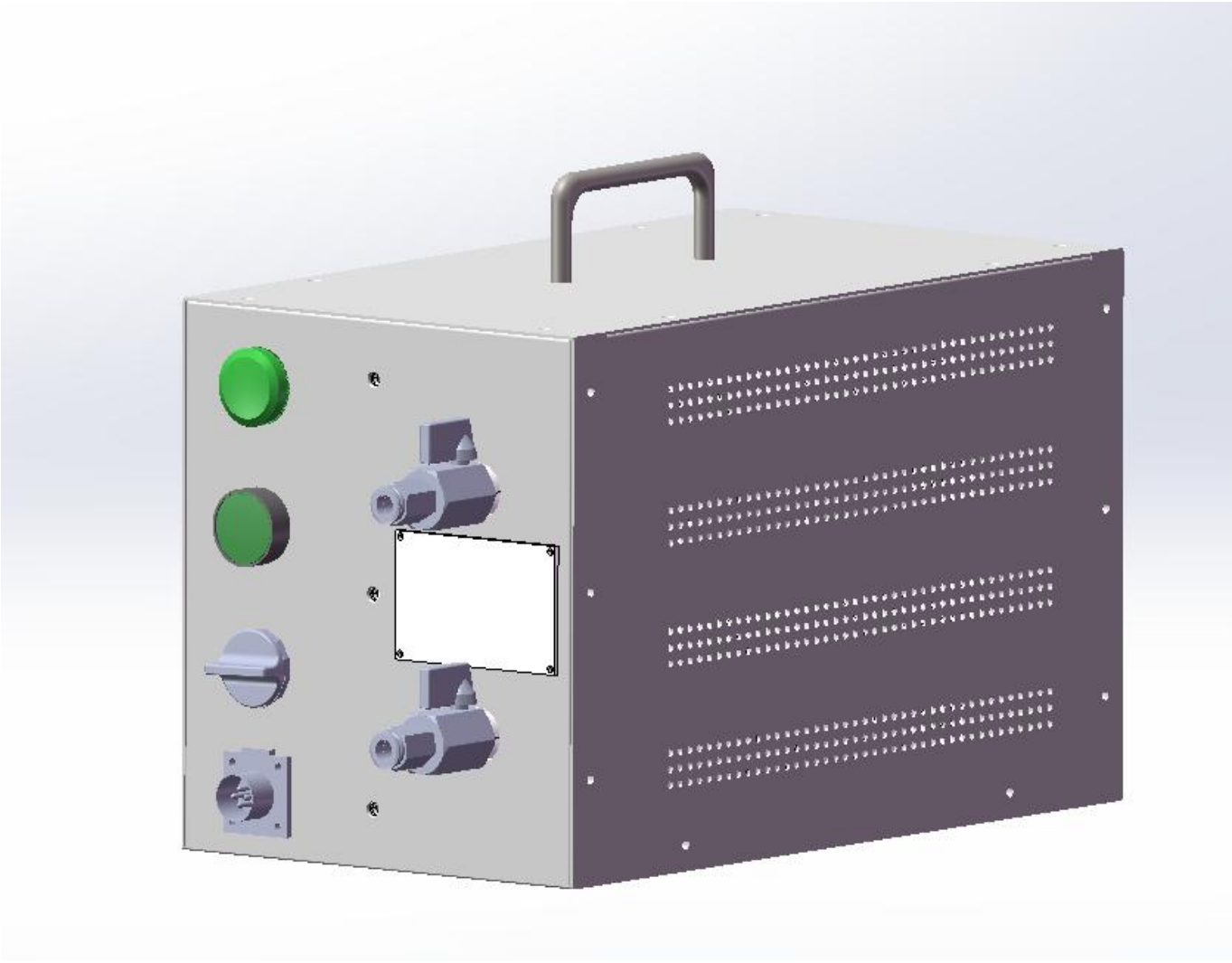

图1-1 CADRO Heater CD-H02 appearance

2) The internal structure of CADRO Heater CD-H02 is shown in the figure below.

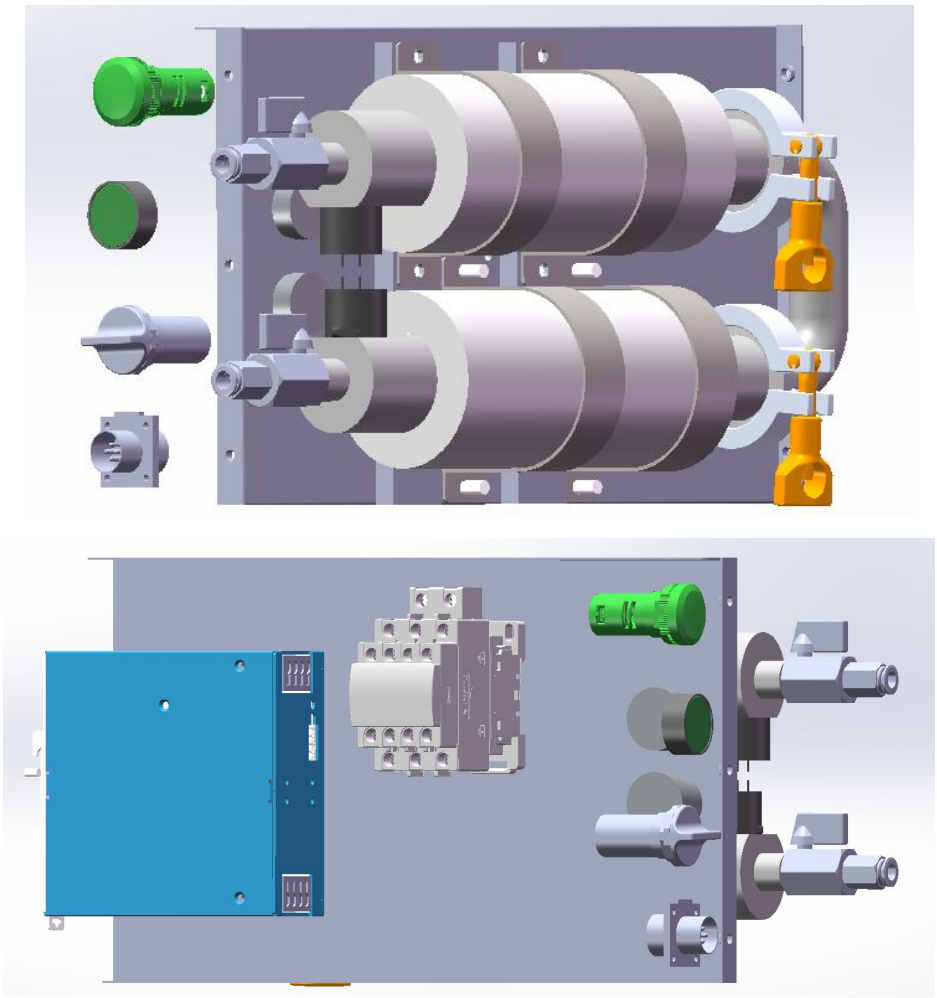

Figure1-2 Internal structure of CADRO Heater CD-H02

3) The composition of CADRO Heater CD-H02 is as follows.

Table 1-1 Composition of CADRO Heater CD-H02

Subsystem	Major parts
Liquid supply system	Two 3kW pipeline type PTC heater, temperature switch (25℃ action), temperature switch (50℃ action), quick plug connector, pipeline and other related accessories.
Power distribution and control system	Airplane socket, knob switch, indicator light, contactor, switch power supply, etc.

1.3 Working environment

The working environment is shown in the table below

Table 1-2 Working Environment Table

Name	Index	**Remarks**
Operating temperature	-40℃~50℃	
Storage temperature	-40℃~70℃	
Heating medium	Antifreeze/purified water	

2 Main technical parameters

CADRO Heater CD-H02 technical parameters are shown in the following table.

Table 2-1 Technical parameters Table

Project	Parameters
Input	AC400±5% V,50/60Hz
Rated heating	6 kW
Product size	339mm*188mm*200mm（No protrusion）
Weight	≤12.5 kg
Outer tube	10mm outer diameter
Head loss	≤10 kPa

3 The principle of the system

1) Heating form

Pipe type PTC heating.

2) Piping System

The low-temperature coolant enters the PTC heater from the manifold，and after heating through the PTC heater, the high-temperature coolant returns to the manifold to heat the medium in the system.

3) Temperature switch control

When the inlet temperature switch detects the system medium temperature exceeding 30°C, the PTC heater will automatically disconnect and stop heating. If the inlet temperature switch malfunctions, the connection will not be disconnected. When the system medium temperature reaches 50°C, the outlet temperature switch of the PTC heater will control the power cut-off. The two switches are connected in series to ensure safety. After the temperature switch is turned off, the system cannot automatically recover. You need to manually turn it on.

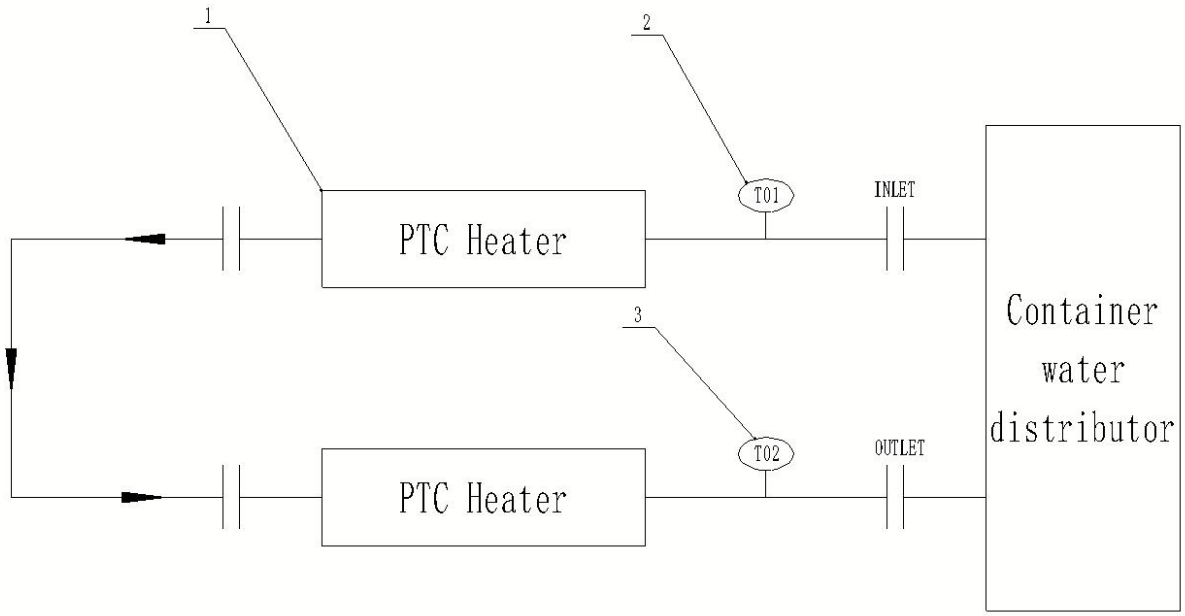

Figure 3-1 system schematic diagram

1、PTC heater 2、inlet temperature switch 3、outlet temperature switch

4 List of main parts

The main parts are shown in the table below

Table 4-1 Main parts Table

Serial number	Name	Quantity	Specifications Model number	Remarks
1	3kW PTC heater	2	SN6L-3000	Electrical：AC400V±5%
				Rated power：3000W±10%
2	Temperature switch	1	TM22-030A3	Electric：DC24V
				Operating temperature：30±3℃
				Reset temperature：20±5℃
3	Temperature switch	1	TM22-050A3	Electric：DC24V
				Operating temperature：50±3℃
				Reset temperature：40±5℃

5 Unit picture caption

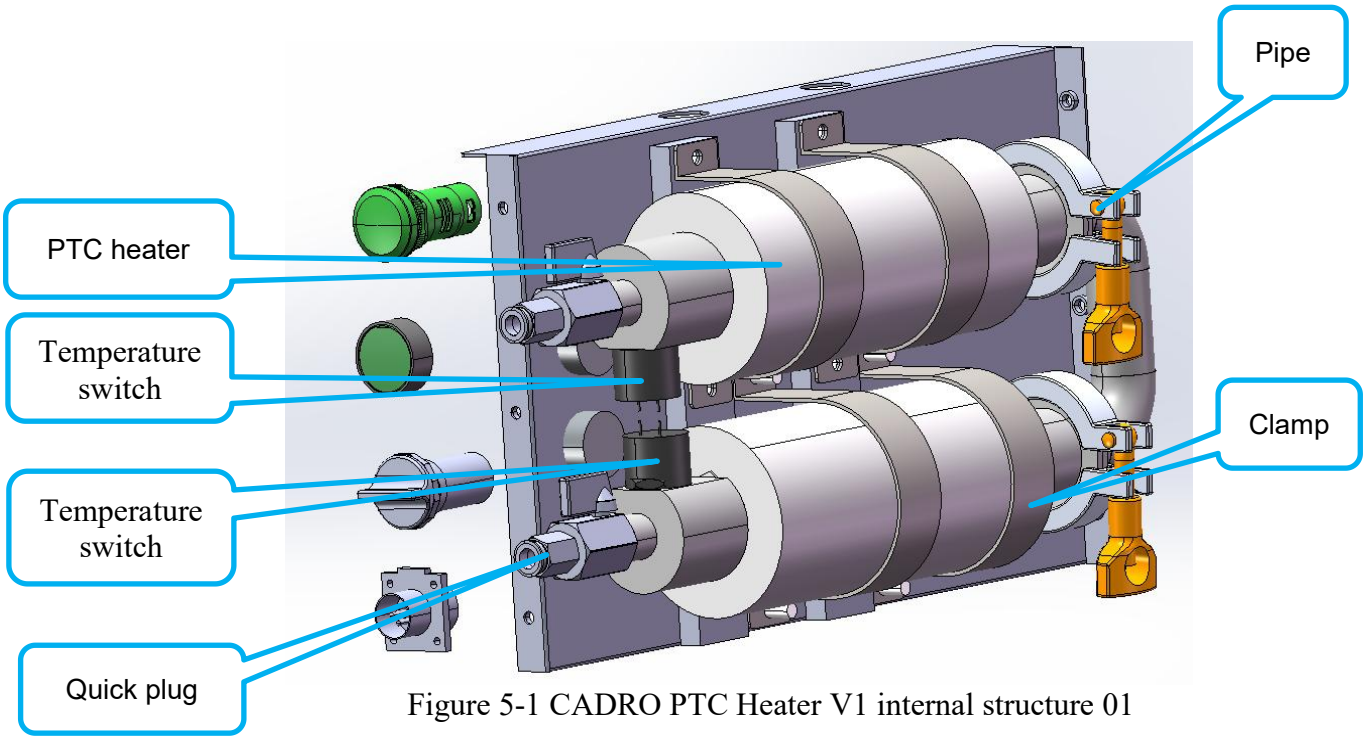

Figure 5-1 CADRO PTC Heater V1 internal structure 01

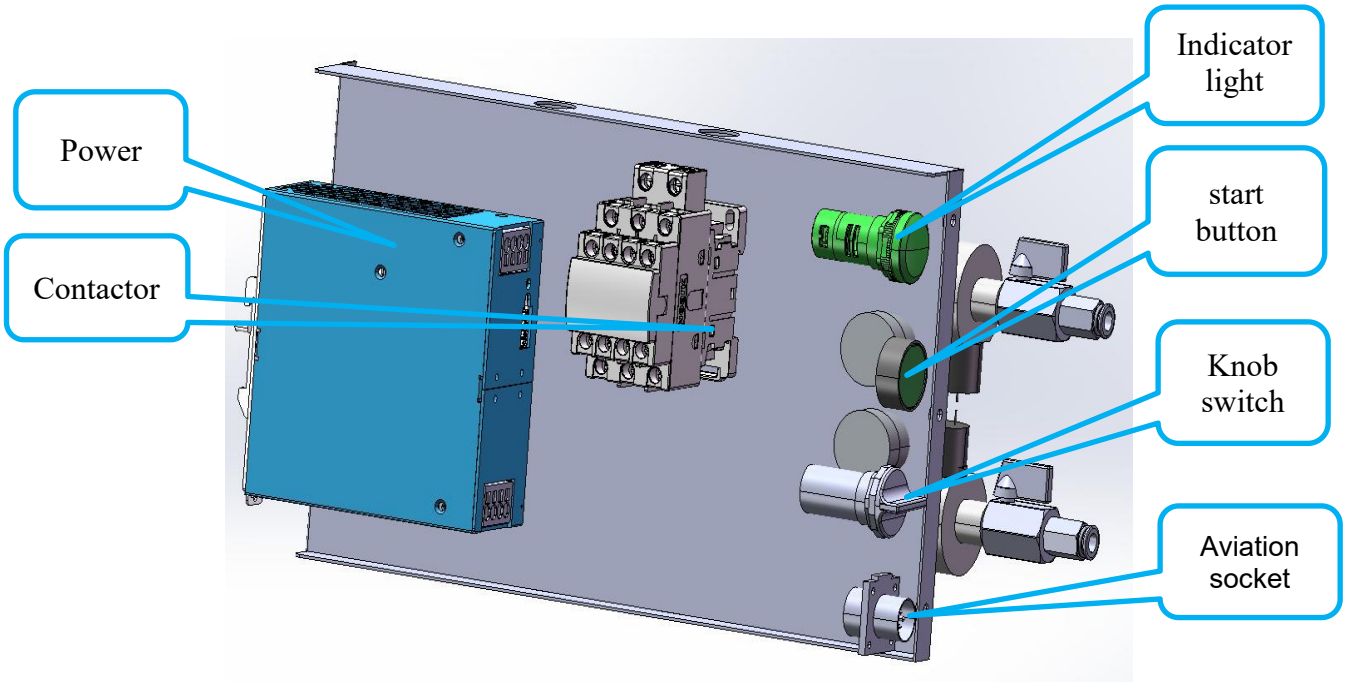

Figure 5-1 CADRO PTC Heater V1 internal structure 01

6 Liquid cooling device installation

1）Place the PTC heater on the container shelf in the position of the original mining rigs, and after placing it flat, use the original mining rigs 10mm hose to connect the water distributor with the inlet and outlet of the PTC heater.

2）External power supply source: Use the original mining rigs power supply, AC400±5%V, 50/60Hz.

7 System use and operation

The distinction of symbols indicating the degree of danger: PTC heater“⚠”is marked with power, and it is forbidden to touch the socket marked with power.

7.1 Precautions for use

a） The device should avoid wiring in the middle;

b） If the equipment has abnormal conditions (such as burnt odor, etc.) should stop, disconnect the power supply, and check;

c） The power supply must be disconnected before the equipment is maintained or repaired;

d） It is forbidden to operate with wet hands, otherwise it is easy to cause electric shock accidents, and it is forbidden to place debris at the top of the PTC heater at will, and it is not allowed to stand or sit on the PTC heater;

e）PTC heater front power supply socket, water inlet, water outlet is equipped with protective cap, in the interface is not used, ensure that the protective cap should be covered with the corresponding port, to prevent foreign matter from entering.

Caution

If the heater is not used for a long time, disconnect the main power supply, inlet and outlet hoses, and remove it from the shelf.

7.2 Check before use

a） PTC heater structure is firm and not loose；

b） Check whether the equipment power supply voltage (AC400V) is normal;

c） Check whether the appearance of the heater is normal and whether the components are firmly installed.

7.3 Turn on the container cooling system

a） Turn on the cooling system of the container and the coolant will circulate through the PTC heater.

7.4 Turn on and off Steps

a） Check the PTC heater, there should be no obvious abnormality;

b） Determine the shelf position for the PTC heater;

c） Disconnect the upstream miniature circuit breaker (in the distribution cabinet or PDU) corresponding to this position.

d） Lift the PTC heater, place it on the shelf in the designated position, ensure it is level, and confirm the power switch is set to "OFF".

e） Connect the power outlet connector；

f） Connect the hose to the corresponding inlet and outlet of the heater, and ensure that the connection is normal and firm. When connecting, pay attention to the residual coolant in the pipeline and do not let it drip to the equipment;

g） Open the container coolant circulation system；

h） Check for coolant circulation at the inlet and outlet ports；

i） Close the miniature circuit breaker on the upper level；

j） Turn the knob on the heater's front panel to the' ON' position to power the PTC heater.；

k） Press the "START" button to activate the "Plot lamp" on the panel, initiating the system. The heater will automatically shut down based on the inlet and outlet temperatures.；

l） The PTC heater automatically stops heating when the inlet water temperature reaches 30°C or the outlet temperature approaches 50°C. It can restart after a 10°C temperature drop. If the cooling water temperature fails to reset the PTC heater automatically and requires reactivation, remove the PTC heater and manually add liquid below 13°C to quickly reset the temperature switch. ;

m） To manually turn off the heater, simply rotate the "Switch" knob on the panel to "OFF". The system will stop heating. Even if the knob is turned to "ON", the system will remain off.；

n） Disconnect the corresponding miniature circuit breaker；

o） Confirm the knob switch on the panel is in the OFF position；

p ） Unplug the power cord, connect the connector base, and put on the protective cap；

q） Close the inlet and outlet ball valves；

r） Disconnect the hose between the connector distributor and the PTC heater, and be careful not to let coolant splash onto the PTC heater or other equipment.；

s） Gently lift the PTC heater, pull it out, and remove it from the shelf. Be careful to prevent any remaining liquid inside the PTC heater from entering other equipment. Refer to the mining machine's operation manual for the removal process. ；

t） Drain residual liquid from the PTC heater pipe；

u）Secure the protective caps on the PTC heater's socket and inlet/outlet ports to prevent foreign matter from entering.

Figure 7-1 shows the panel

Note: After the system starts, check whether the running indicator light is normal.

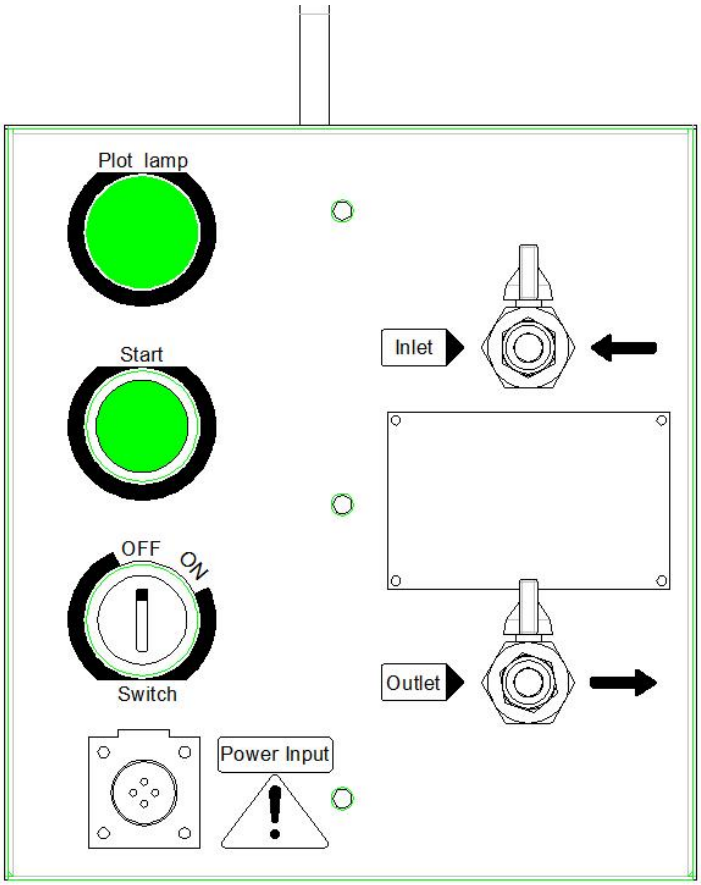

Figure 7-1 Schematic diagram of the panel

Note：As shown in Figure 7-2(a), the ball valve is closed; as shown in Figure 7-2(b), the ball valve is open.



（a）



（b）

Figure 7-2 Schematic diagram of ball valve opening and closing

8 Common faults and troubleshooting methods

Common faults and troubleshooting methods are shown in the following table.

Table 8-1 common faults and troubleshooting methods Table

Serial number	Breakdown situation	Cause of occurrence and how to remove it
1	Unable to start	1.The supply voltage is abnormal. Check whether the externa I power supply is normal or check whether the PTC heater power connector is damaged. 2.The switching power supply is abnormal. The output voltage of the switching power supply is not DC24V, replace the switching power supply. 3.The temperature switch is abnormal. The temperature switch does not reset itself to the normally closed state. Wait for the temperature to decrease by 10 ℃ and then reset itself, or replace the temperature switch. 4.The contactor is abnormal. The contactor main Ioop or auxiliary contact is abnormal, replace the Contactor. 5.Knob switch abnormal. Knob switch 2 contacts have 1 or all abnormal, replace the knob switch; 6.The start button is abnormal. The contact on the back of the start button is abnormal, replace it with another contact or replace the start. 7.The cable is loose. The cable of the main Ioop or control loop is loose, resulting in poor contact or break. Start again after securing it.
2	Unable to stop automatically	1.Temperature switch damaged. Check whether the temperature switch at the water inlet and outlet does not operate when the water temperature reaches the operating temperature. Replace the failed temperature switch. 2.The contactor is damaged. The main loop of the contactor is stuck and cannot be broken. Replace the contactor.

3	The indicator light is not on	1.The indicator light is damaged. The indicator light does not work properly, replace the indicator light. 2.Loose cable connections. Cables related to the indicator are loose. Retighten. 3.PTC heater is not running. Restart the PTC heater or check the cause of the failure to turn it on.
4	Trip the upper switch after starting	1.PTC heater internal heating tube damaged. The two heating tubes inside the PTC heater are damaged, causing a short circuit. Replace the heating tubes. 2.Cables loose and fall out, out of place, or insulation drops. PTC heater internal cables fall off, out of place or damp caused by insulation drop resulting in short circuit. Reconnect the cable to the original position and dry it until the insulation standard is reached. Check if there is no damage to other devices, start it again. 3.The switching power supply is damaged. The switching power supply is damaged resulting in short circuit; Replace the switching power supply. 4.Socket damaged. A damaged socket causes a short circuit; Replace the socket.
5	There is a significant decrease in heating power	1.The internal power supply is abnormal. Check whether the upper and lower end of the internal contactor three-phase AC 400V is missing phase. If the upper end is missing phase, replace or repair the socket; If the lower end is missing phase, Replace the contactor. 2.PTC internal heating pipe is damaged. PTC heating tube damage caused insufficient power. Replace the PTC heating tube.
6	Abnormal Sound	1.The switching power supply is abnormal. The switching power supply is damaged, causing abnormal sound. Replace the switching power supply. 2.The contactor is abnormal. Abnormal contactor leads to abnormal sound. Replace the contactor.
7	Automatic shutdown for a short time after start-up	1.No water circulation in the pipeline. The external circulating water is not opened or the PTC heating pipe is blocked inside. Turn on the external circulating water and repair/replace the PTC heating pipe.

9 Care and service

9.1 Overview

Preventive maintenance refers to maintenance carried out at predetermined intervals or in accordance with prescribed guidelines in order to reduce the probability of product failure or prevent functional degradation, mainly including adjustment, regular inspection and necessary repairs. Make equipment maintenance, operators familiar with the performance of the product structural principles, methods of use and precautions, so that the equipment to play its due function.

Do a good job of maintenance, to ensure that the equipment is in good working condition.

9.2 Preventive Maintenance

1） Operator Monitoring

The operator monitors the condition of the equipment during normal use with the aim of detecting potential faults.

Once the operator finds that the equipment is abnormal, it should quickly confirm and check the fault to find out the cause of the fault.

2） Check before use

When using the equipment normally, the operator shall carry out qualitative inspection as planned to determine whether the product performs the specified function.

a) Check whether the inlet and outlet liquid pipelines, power lines and other connections are in good condition;

b) Check whether the appearance and humidity of the equipment are normal.

9.3 Regular Maintenance

1）Repair pipes for leaks

When the pipeline is repaired, the right panel and top plate can be opened to check and repair the pipeline part, as shown in the figure.

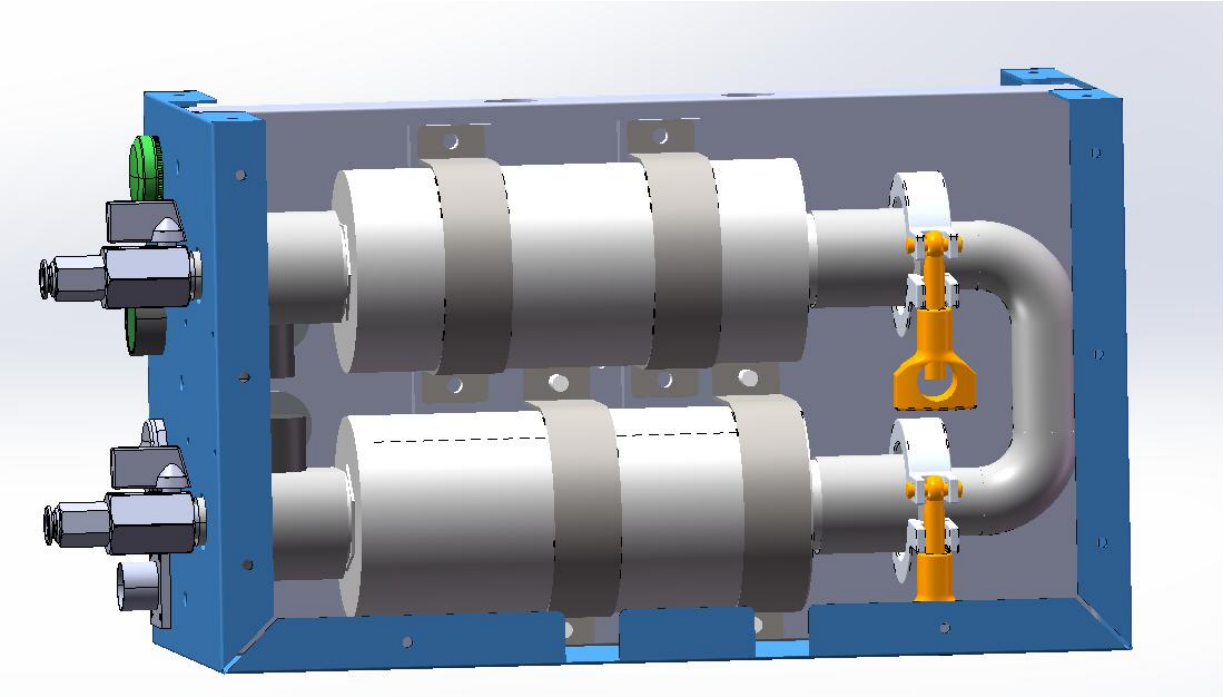

Figure 9-1 Schematic diagram of pipeline repairs

The heater should be checked for leaks every year. If a leak is found, it should be repaired immediately. It should only be put into use after thorough repair.

2）**Inspection of electrical components**

The left panel and top plate can be opened during the electrical inspection, and the left panel and top plate can be fixed again after the overhaul is completed, as shown in the figure.



Figure 9-2 Electrical maintenance diagram

Check and maintain the terminals and crimping screws on the electronic control device every year to prevent the terminals and crimping screws from loosening, poor contact or component damage, which will affect the normal operation of the heater.

10 Safety instructions

When the PTC heater is not in use for a long time, turn off the main power supply and remove it from the shelf. This will prevent accidents. Read this manual before using this device. If you encounter any difficulties or problems, seek help from the manufacturer.

warning

a) If you notice any abnormalities (such as a burnt smell), immediately turn off the power switch and seek guidance from the manufacturer.
b) Maintenance shall be performed only by professionals, and all power sources must be cut off before maintenance. Operators shall have certain knowledge of electrical equipment operation and shall be trained before operating the equipment.
c) Before starting the machine, be sure to check whether the pipeline valve (if any) is open.

Caution

If the device is not used for a long time, disconnect the mains power and remove it from the shelf.